CORDLESS POWER TOOL STORAGE SHELF

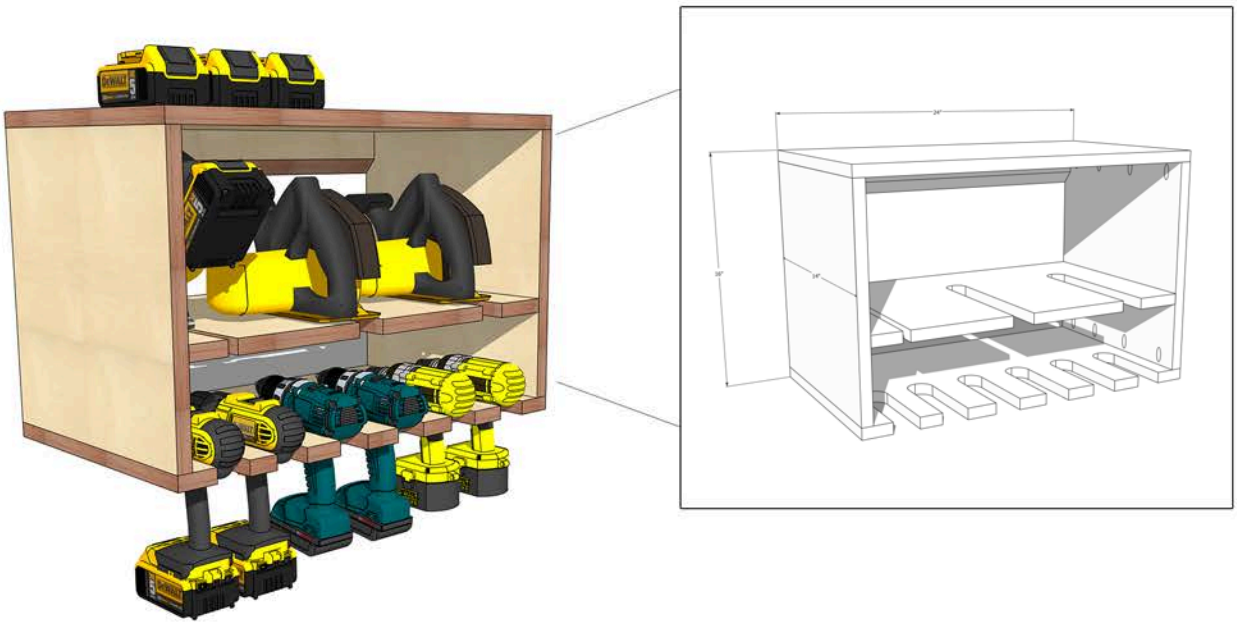

When it comes to shop organization it doesn't always have to look like something out of a magazine. I'm of the school of thought that if it works, the simplest approach is best. That said, I built this simple cordless power tool storage shelf for my tools with a scrap piece of 4' x 4' plywood in about 45 mins. A much needed shop upgrade that I have been putting off for too long.

This shelf measures 24" long x 16" wide x 14" deep and can hold 6 drills/ impact drivers, 2 (blade right) circular saws, a jigsaw, and batteries/chargers as configured. You may need to modify the measurements to fit your tools or personal needs.

Thanks for downloading these plans. If you have any questions or concerns you can reach out to me via instagram @mrfixitdiy or via email at: aaron@mrfixitdiy.com

CLICK HERE TO SEE THE BUILD PROCESS

Reproduction or distribution of this document without the authorization of Amassed Media Group, LLC is strictly prohibited. Copyright 2021, Amassed Media Group, LLC.

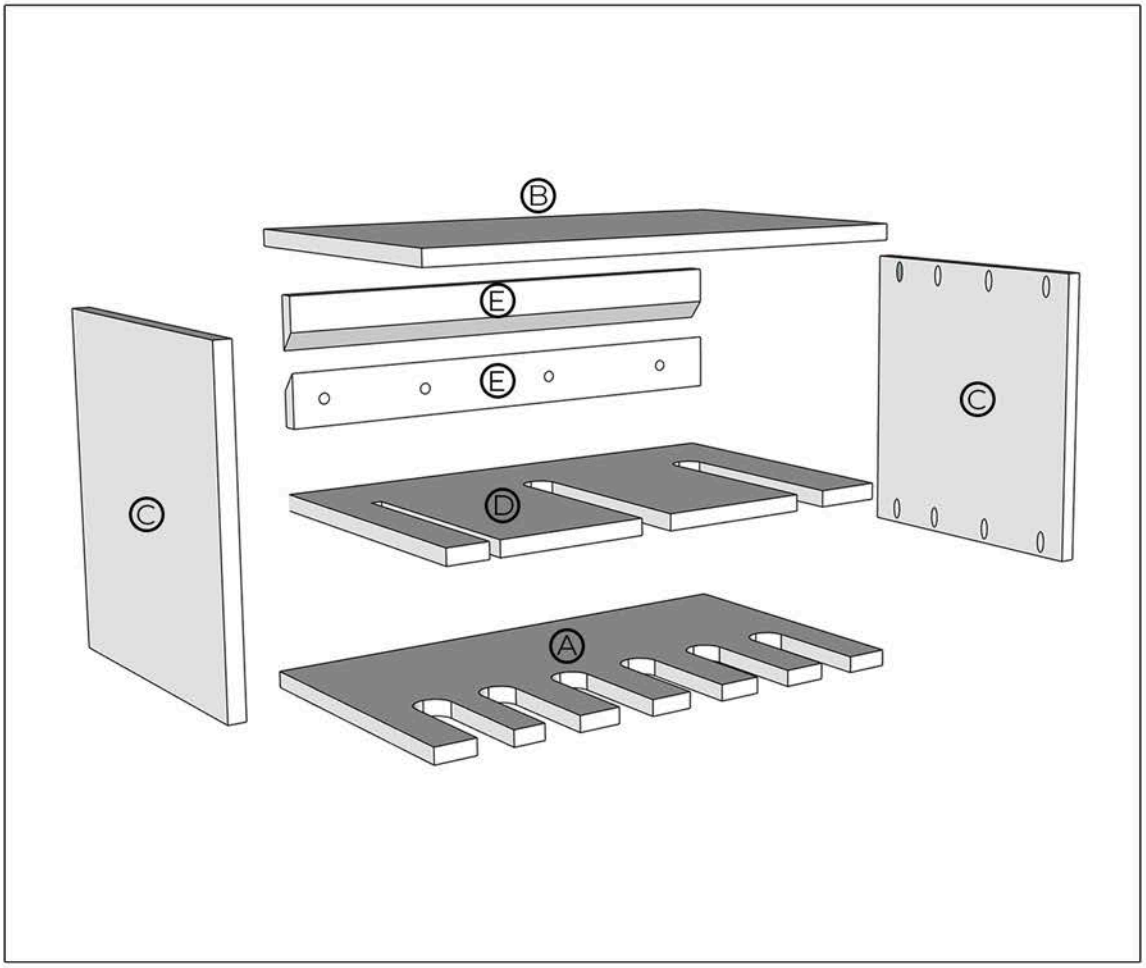

PARTS LIST:

PART	QTY	DESCRIPTION
A	1	BOTTOM SHELF - 24" x 14" - 3/4" PLYWOOD
B	1	TOP SHELF - 24" x 14" - 3/4" PLYWOOD
C	2	SIDE - 14 1/2" x 14" - 3/4" PLYWOOD
D	1	MIDDLE SHELF - 22 1/2" x 14" - 3/4" PLYWOOD
E	2	CLEAT - 22 1/2" x 2 1/2" - 3/4" PLYWOOD MITERED 45° (OPTIONAL)

MATERIAL LIST:

QTY	DESCRIPTION
1	4' x 4' PIECE OF 3/4" PLYWOOD (BALTIC BIRCH OR SIMILAR)
28	WOOD SCREWS (1 1/2" MINIMUM)/POCKET HOLE SCREWS/ OR BRAD NAILS
-	TITEBOND 2 WOOD GLUE

TOOLS USED: LINKS AVAILABLE HERE

DESCRIPTION	
DEWALT 20V MAX 7 1/4" CIRCULAR SAW	WOODWORKING CLAMPS
TABLE SAW (OPTIONAL)	CORDLESS PALM ROUTER (OPTIONAL)
MEASURING TAPE/ PENCIL	KREG POCKET HOLE JIG (OPTIONAL)
DEWALT 20V MAX DRILL/ DRIVER COMBO	SAFETY GLASSES AND EAR PROTECTION
JIGSAW	16 GA. BRAD NAILER (OPTIONAL)

Reproduction or distribution of this document without the authorization of Amassed Media Group, LLC is strictly prohibited. Copyright 2021, Amassed Media Group, LLC.

Cut List:

Cut the component pieces as shown from a single 4'x4' piece of 3/4"plywood using a table saw, circular saw, or jigsaw.

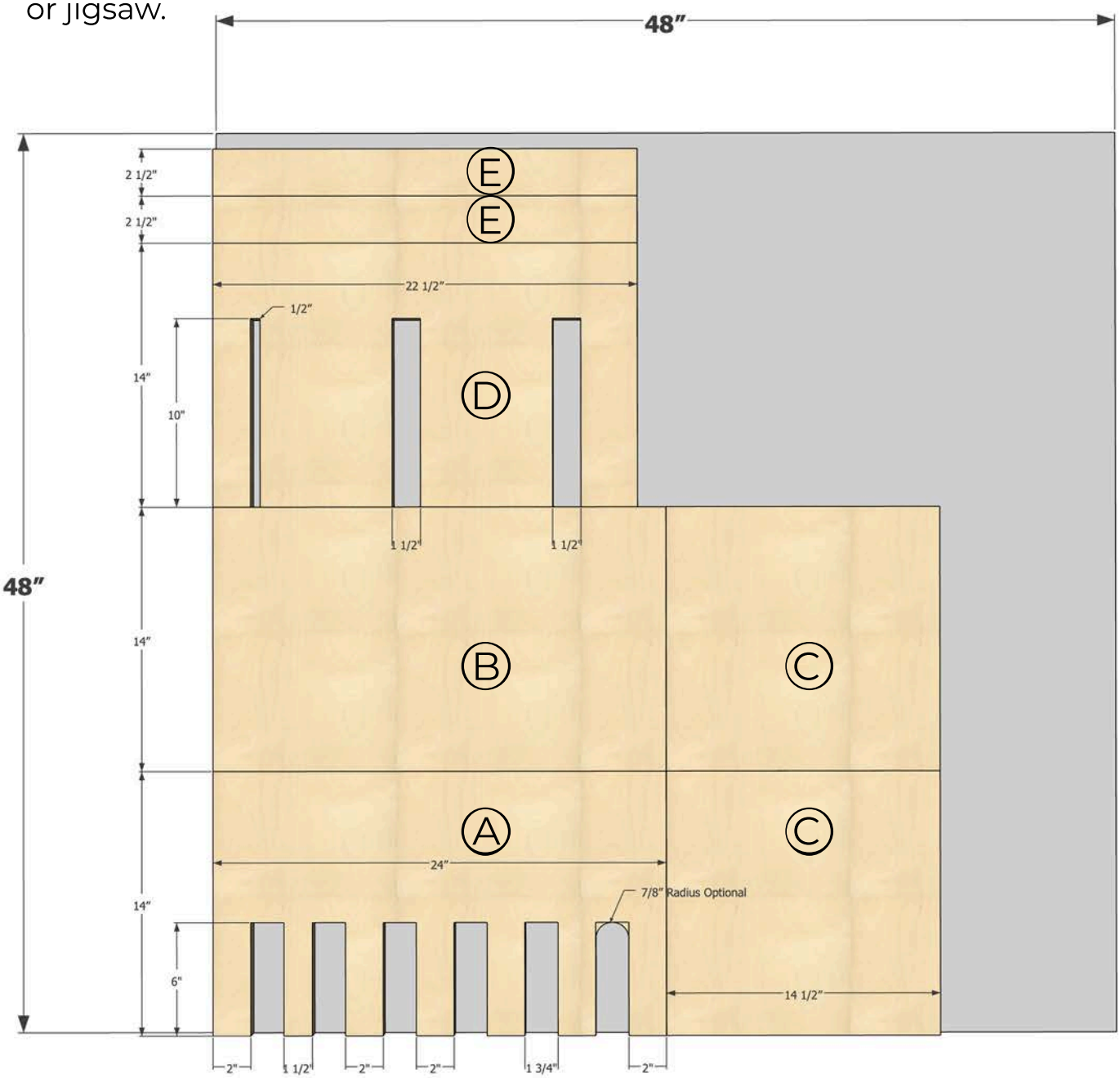

*Use a jigsaw to achieve the optional radius cuts as shown above.
You can also use a 1/4" round over bit with a router to round over the edges if desired.

Reproduction or distribution of this document without the authorization of Amassed Media Group, LLC is strictly prohibited. Copyright 2021, Amassed Media Group, LLC.

ASSEMBLY INSTRUCTIONS:

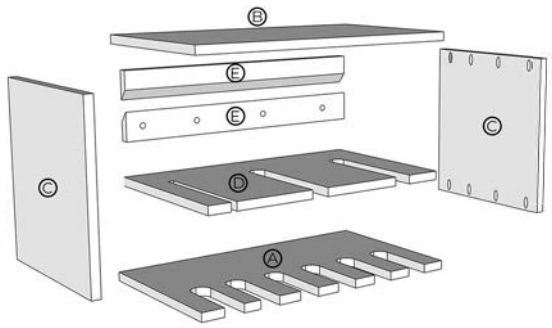

STEP 1 :

Cut all components (A thru E) according to the cut list from page 3 using a circular saw, table saw, or jig saw.

*Use a 1/4" round over bit and a palm router on saw and drill kerf cutouts if desired.

STEP 2 :

If planning to mount to the wall with a french cleat (E - as shown) use a table saw to miter a 45° bevel on one side of each(E) component. (Shown right)

Pre-drill mounting locations on one of the (E) components that will attach to the wall if desired.

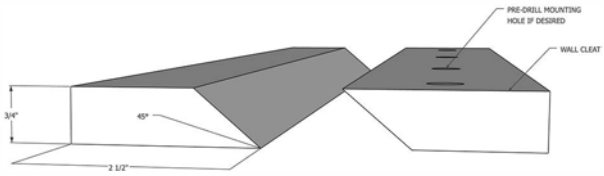

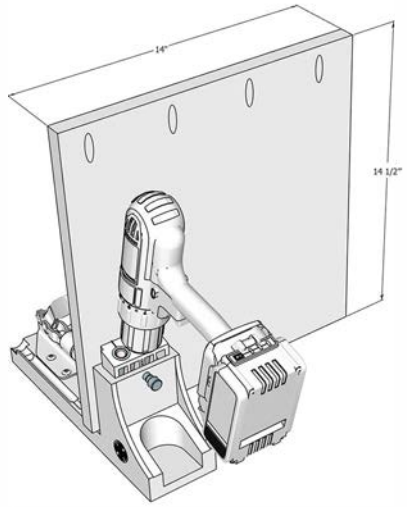

STEP 3 :

If using a Kreg Pocket Hole Jig to mount the sides of the shelf to the top and bottom, use the jig to pre-drill holes in the side pieces (C) and the underside of the middle shelf (D). Make sure it is set for the thickness of the plywood you are using. (3/4" as shown)

If you do not have a Kreg Jig or choose to assemble with screws or brad nails, skip to Step 4.

Reproduction or distribution of this document without the authorization of Amassed Media Group, LLC is strictly prohibited. Copyright 2021, Amassed Media Group, LLC.

ASSEMBLY INSTRUCTIONS:

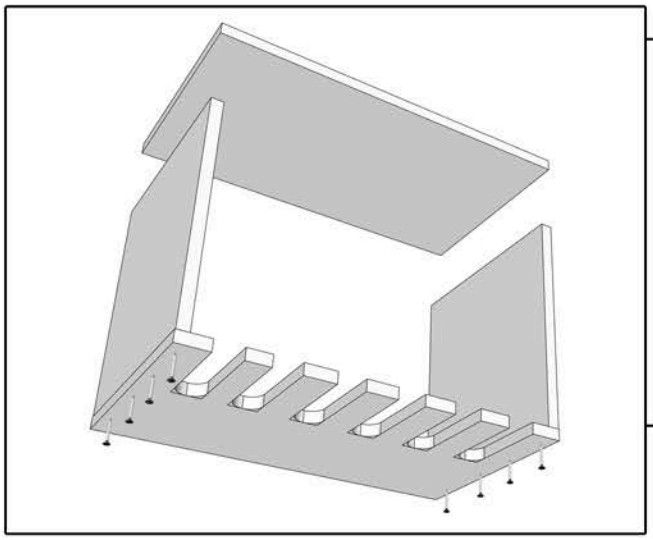

STEP 4 :

Apply a liberal amount of wood glue to the bottom of the end of the side panels (C). Mount the sides (C) to the bottom shelf (A) using 1 1/2" wood screws, the previously drilled pocket holes, or 1 1/2" brad nails and a brad nailer.

Depending on the screws you are using, you may wish to pre-drill a pilot hole to keep the wood from splitting.

STEP 5:

Measure 9" from the top of the side panels (C). The top of the middle shelf will mount at this height inside the box (4 3/4" from bottom). Apply wood glue to the ends of the middle shelf, slide it in place and secure it with screws, brads, or pocket hole screws.

Depending on the height of the saws you wish to keep on the middle shelf, you may wish to have this shelf mounted higher or lower inside the box. Measure your tools first.

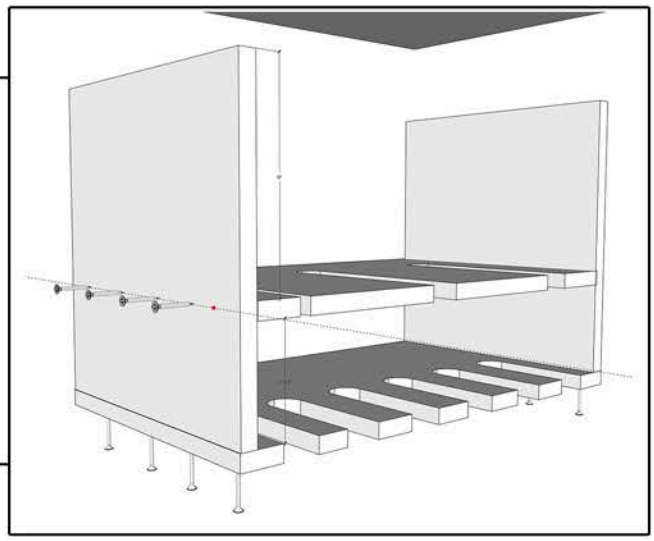

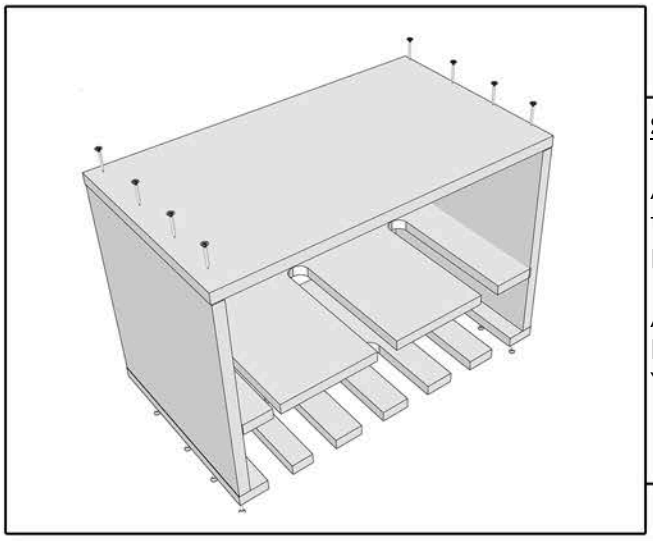

STEP 6:

Apply wood glue to the ends of the side panels (C). Place the top shelf (B) in place on the sides (C) and secure it in place with screws, brads, or pocket hole screws.

As designed the top shelf is a generic storage area for batteries, chargers, sanders, extra tools or other hardware. You may wish to modify the design to fit your needs.

Reproduction or distribution of this document without the authorization of Amassed Media Group, LLC is strictly prohibited. Copyright 2021, Amassed Media Group, LLC.

ASSEMBLY INSTRUCTIONS:

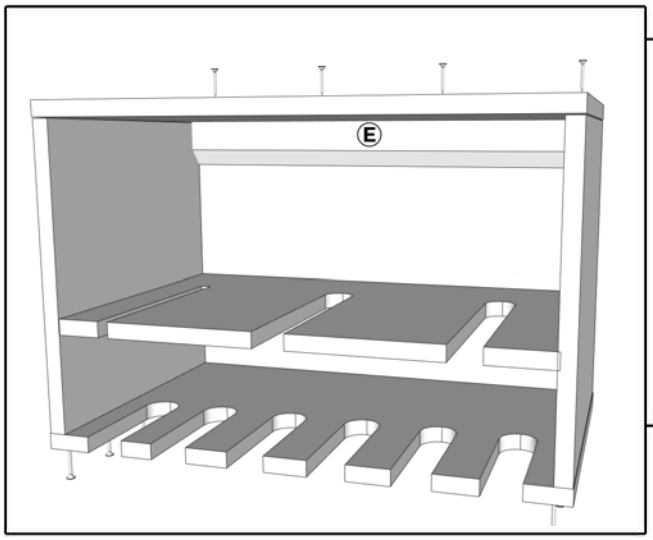

STEP 6:

If mounting the shelf with the french cleat system (E), mount one of the mitered pieces on the inside of the top of the box (miter facing in) and secure it in place with wood glue, screws or brad nails.

STEP 7:

Mount the opposite cleat (E) (with the mitered cut facing up and away from you) to the wall in your desired location using wood screws, or lag screws. If mounting to drywall, use drywall anchors or secure directly to studs. Do not mount to just drywall with drywall screws as it is unlikely to hold once weight is added to the shelf.

If you do not wish to use a cleat, screw the shelf directly to the wall.

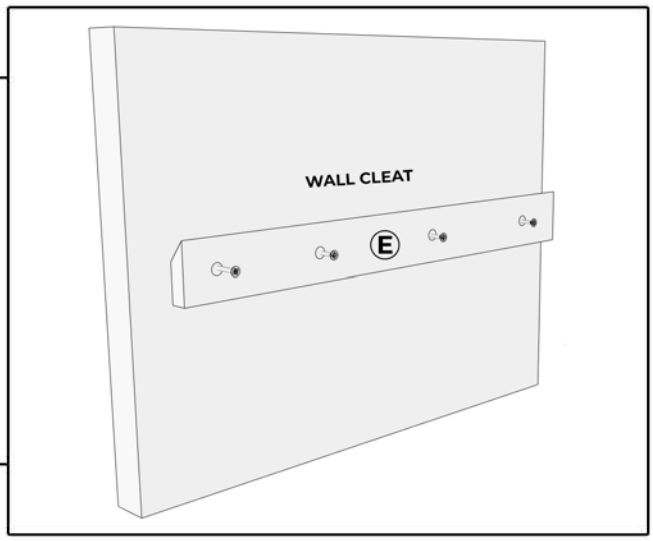

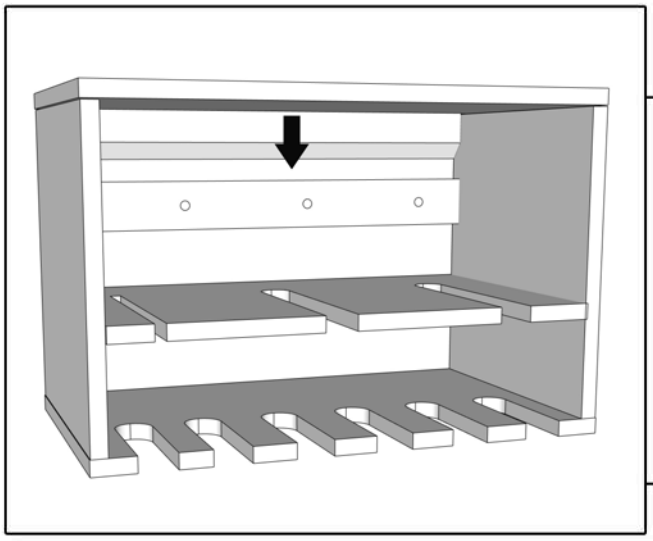

STEP 8:

Slide the shelf in place over the wall cleat (E) and set the shelf in place. The weight of the shelf, and gravity will hold it in place on the cleat. No additional screws are required. If you wish to move the shelf, lift up on it to lift it off the cleat and remove it.

Once installed, load up with tools as necessary.

Reproduction or distribution of this document without the authorization of Amassed Media Group, LLC is strictly prohibited. Copyright 2021, Amassed Media Group, LLC.